E-AblePower Technology

LISHUI E-ABLE POWER EQUIPMENT CO., LTD
No.368 Chengbei Road, Liandu District, Lishui, Zhejiang, China
www.e-ablepower.com | sales@e-ablepower.com | WhatsApp +86 153 5558 9600

INSTALLATION MANUAL

SolarWrap SQ140 vertical solar module

Square pole-mounted PV module · module and pole assembly · keep for maintenance



PACKED IN THE CARTON

Solar module	1 set, square section
Mounting brackets	per pole drawing
Set screws	M8, length to suit pole
MC4 adapter	per module joint
Allen key	M4
Manual	1 copy

TOOLS YOU NEED

Allen driver	M4 bit
Torque wrench	to 450 N·m for the base
Spirit level	600 mm
Crane / MEWP	rated for the assembly
Cable ties	UV-rated
Concrete	for the anchor cage

Safety first. The assembled pole is lifted with a crane — plan the lift, the exclusion zone and the wind limit before starting. Work at height needs a trained crew and harness. PV modules generate voltage in daylight; never short the MC4 leads.

This manual follows the factory assembly sequence for the square module on a SolarWrap pole. Where the module is retrofitted to an existing pole, start at step 02 and use the bracket kit only.

LISHUI E-ABLE POWER EQUIPMENT CO., LTD
No.368 Chengbei Road, Liandu District, Lishui, Zhejiang, China
www.e-ablepower.com | sales@e-ablepower.com | WhatsApp +86 153 5558 9600

STEP 1 — FOUNDATION AND FIRST MODULE

Before you lift anything

Check	Requirement for SQ140	If it fails
Pole diameter	≤ 120 mm square section at the clamp height	Change bracket size
Foundation	Anchor cage cast and cured before the lift	Delay the lift
Base bolts	Pitch and projection match the flange	Re-drill the template
Verticality	≤ 1° out of plumb over the module length	Re-plumb before tightening
Cable route	Inside the pole, drip loop at the gland	Re-route before assembly

STEPS 01–04

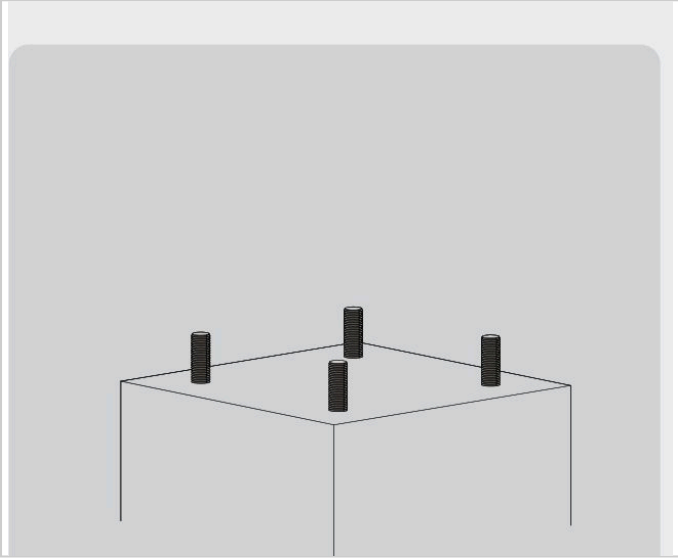

01 Pour the anchor cage and foundation days in advance

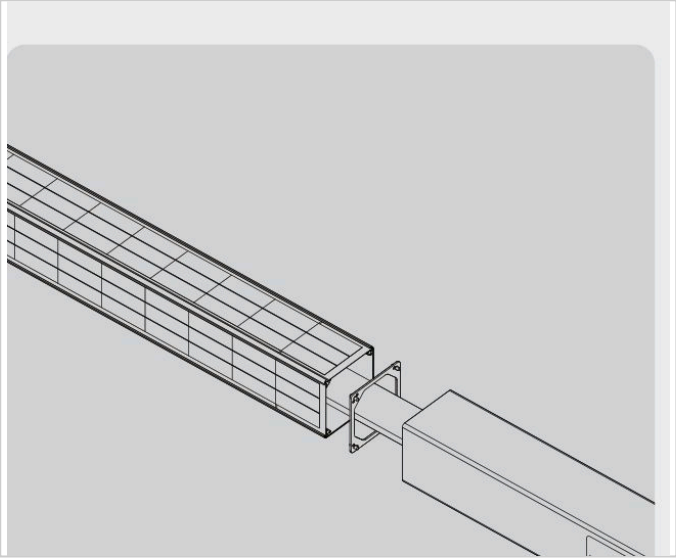

02 Lay the pole flat, fit the base bracket, mount the first module

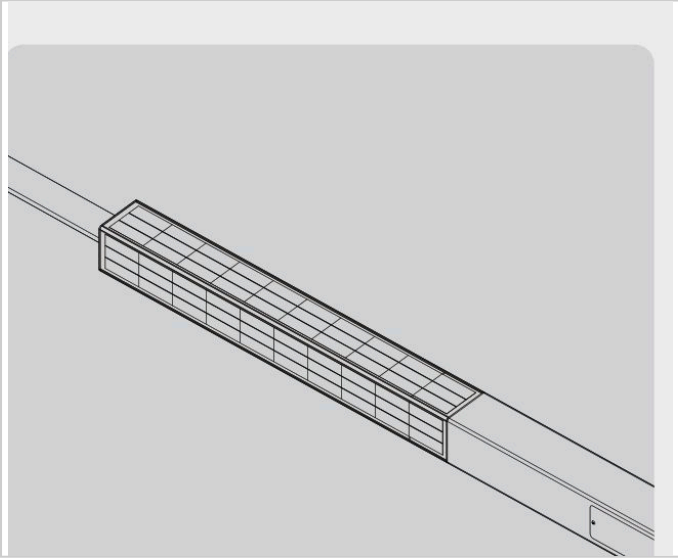

03 Check the first module — repeat for further sections

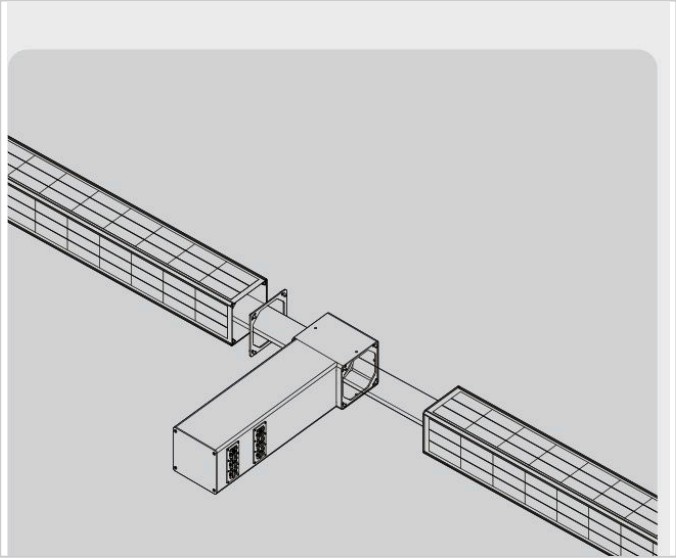

04 Fit the lamp head, then the next vertical module

Steps 01, 05 and 07 apply when the module is supplied on a SolarWrap pole. On a retrofit, only 02–04 and 06 are used.

STEP 2 — LIFT, FIX, CHECK

Stand it up and lock it down

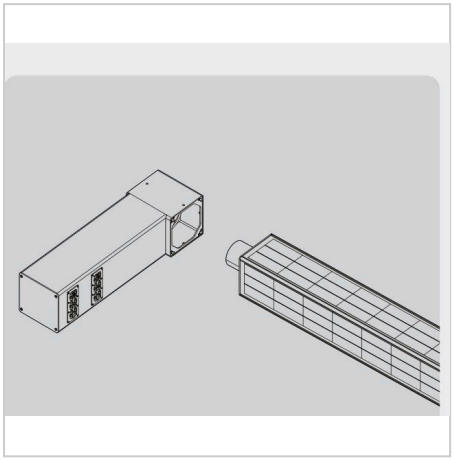

05 Fit the top luminaire and set its direction

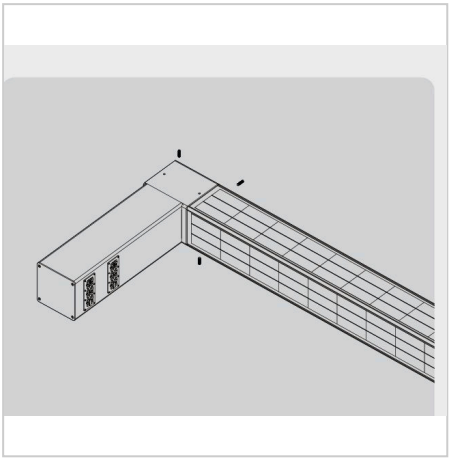

06 Check all parts, tighten the screws

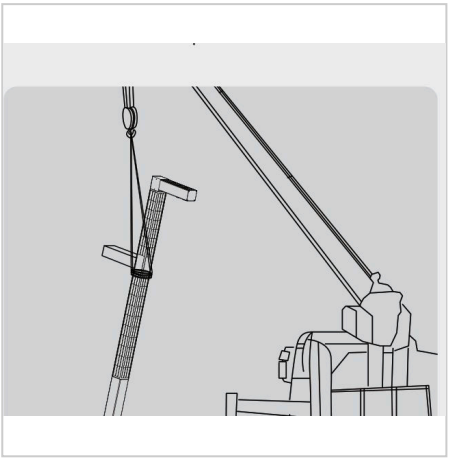

07 Lift the assembled pole with a crane

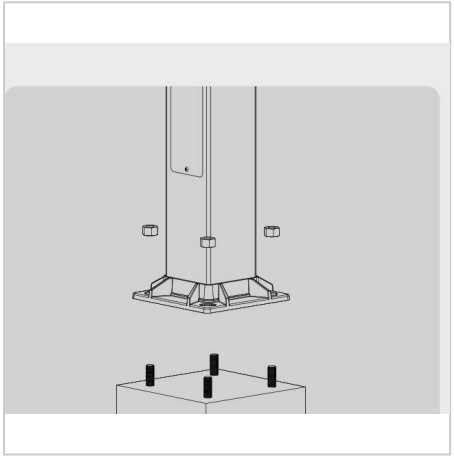

08 Seat it on the base, secure at 450 N·m

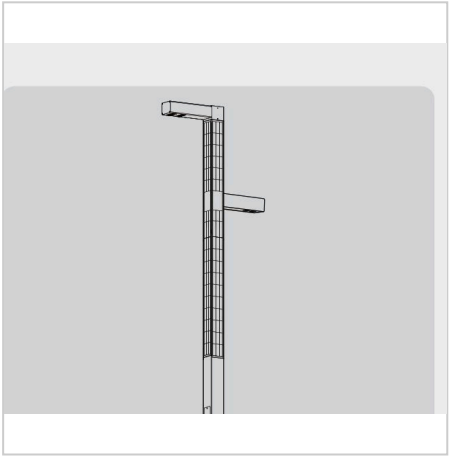

09 Check stability — installation complete

TORQUE AND CONNECTION RULES

Lamp head screws	Tighten fully — the head carries the wind load of the top section
Base screws	450 N·m, cross pattern, re-check after 24 h
MC4 polarity	Male = positive, female = negative (18/36 V)
Module joint	300 mm adapter between sections; last pair left open

Do not lift by the module. Sling the pole at two points below the lowest module. A sling round the module frame will crush the glass edge.

LISHUI E-ABLE POWER EQUIPMENT CO., LTD
No.368 Chengbei Road, Liandu District, Lishui, Zhejiang, China
www.e-ablepower.com | sales@e-ablepower.com | WhatsApp +86 153 5558 9600

STEP 3 — COMMISSION AND HAND OVER

Set it up, then sign it off

COMMISSIONING

Item	Setting / check
Array profile	Enter the installed array voltage and current — never leave a factory default
Battery type	LiFePO4, voltage window matched to the pack datasheet
Dimming profile	Match to the site's operating hours
Output check	Measure Voc and Isc at midday; within 5% of nameplate

TROUBLESHOOTING

Symptom	Likely cause	Action
No output at midday	Open MC4, reversed polarity, covered face	Check joints; confirm male = positive
Pole not plumb	Base bolts not seated or foundation off	Re-shim and re-torque
Module loose	Bracket screws settled after the lift	Re-torque after 24 h

HANDOVER RECORD

Site / project		Install date	
Module serial no.		Quantity	
Base torque		Clamp torque	
Measured Voc		Measured Isc	
Installer		Signature	

SolarWrap SQ140 carries a **5-year** warranty against manufacturing defects in materials and workmanship from the shipment date, covering the module and its brackets. It excludes damage from incorrect installation, unauthorised modification, lightning, storm loads above the tested wind class and normal glass soiling.