E-AblePower Technology

LISHUI E-ABLE POWER EQUIPMENT CO., LTD
No.368, Chengbei Road, Liandu District, 323000, Lishui City, Zhejiang, China
www.e-ablepower.com | arthur@e-ablepower.com | WhatsApp +86 153 5558 9600

ALL-IN-TWO SOLAR STREET LIGHT · SERIES DATASHEET

AURORAPATH

All-in-two solar path and street light · YL-30P / YL-60P / YY-80 / YY-100 / YH-100 / YH-120

AuroraPath collects the three compact all-in-two families — YL, YY and YH — into one range from 12 W to 50 W of LED output. Every model keeps the LiFePO4 pack and the MPPT controller inside the head and carries the panel on an adjustable bracket, so a footpath, a campus perimeter or a residential street can be lit without trenching or a separate battery cabinet.

LED OUTPUT	LUMINOUS FLUX
12–50 W	**1,800–8,000 lm**
PANEL POWER	MOUNTING HEIGHT
30–120 W	**3–10 m**

Garden and park paths · sidewalks · campus perimeters · hotel walkways · residential streets · plazas



All-in-two solar pathway and street light

SERIES AT A GLANCE

MODELS AND HEADLINE RATINGS

Model	LED output	Luminous flux	Solar panel	LiFePO4 battery	Mounting height
YL-30P	12 W	1,800 lm	30 W / 5 V	80 Wh	3–6 m
YL-60P	15 W	2,500 lm	60 W / 5 V	128 Wh	3–6 m
YY-80	20 W	3,400 lm	60 W / 6 V	192 Wh	7–8 m
YY-100	30 W	4,800 lm	70 W / 6 V	256 Wh	7–8 m
YH-100	40 W	6,400 lm	100 W / 18 V	320 Wh	8–10 m
YH-120	50 W	8,000 lm	120 W / 18 V	384 Wh	8–10 m

WHY THE AURORAPATH

ENGINEERING CHOICES THAT MATTER ON SITE

Three sizes, one platform

YL for paths and gardens, YY for plazas and park roads, YH for residential streets — one controller family, one spare-parts list.

Integrated head

Battery and controller sit inside the die-cast housing; nothing is buried and no cable runs down the pole.

Adjustable panel

The panel bracket is set on site, so the array can face the sun even when the path runs east–west.

Bat-wing lens

Polarised bat-wing optics light the walking surface evenly instead of throwing a narrow spot.

Battery indicator

A visible charge indicator lets maintenance staff read the state of the pack from the ground.

Six working profiles

L / T / M / U / DEMO / OFF by remote, so a park path can run at low output after midnight and a campus road can keep a higher level.

THE ALL-IN-TWO RANGE

WHERE THIS SERIES SITS

Series	LED output	Luminous flux	Solar panel	Mounting height
AuroraPath ▸	12–50 W	1,800–8,000 lm	30–120 W	3–10 m
SunBeam	60–70 W	9,600–12,800 lm	150–200 W	
Flyhorse	30–50 W	5,800–9,300 lm	100–150 W	7–10 m
Sailing	30–100 W	4,100–14,400 lm	60–150 W	

E-AblePower Technology

LISHUI E-ABLE POWER EQUIPMENT CO., LTD
No.368, Chengbei Road, Liandu District, 323000, Lishui City, Zhejiang, China
www.e-ablepower.com | arthur@e-ablepower.com | WhatsApp +86 153 5558 9600

ALL-IN-TWO SOLAR PATHWAY AND STREET LIGHT · TECHNICAL DATA

AuroraPath

All-in-two solar path and street light · YL-30P / YL-60P / YY-80 / YY-100 / YH-100 / YH-120

TECHNICAL DATA

PER MODEL, FACTORY RATINGS

Parameter	YL-30P	YL-60P	YY-80	YY-100	YH-100	YH-120
LAMP HEAD						
LED output	12 W	15 W	20 W	30 W	40 W	50 W
Luminous flux	1,800 lm	2,500 lm	3,400 lm	4,800 lm	6,400 lm	8,000 lm
LED quantity	60 pcs	60 pcs	120 pcs	140 pcs	140 pcs 5050	140 pcs 5050
Beam angle	155° × 55° (YL)					
Colour temperature	3,000–7,500 K (YL)	6,000–7,500 K (YY / YH)				
CRI	≥ 70 Ra					
Housing	Die-cast aluminium, anti-corrosion					
Lifespan	50,000 h					
Ingress protection	IP65					
SOLAR PANEL						
Power	30 W / 5 V	60 W / 5 V	60 W / 6 V	70 W / 6 V	100 W / 18 V	120 W / 18 V
Cell type	Polycrystalline				Monocrystalline	
Cell efficiency	17–18 %				19–20 %	
BATTERY						
Chemistry	LiFePO4					
Capacity	80 Wh	128 Wh	192 Wh	256 Wh	320 Wh	384 Wh
Charge cycles	2,000					
SYSTEM						
Controller	MPPT					
Working modes	L / T / M / U / DEMO / OFF via remote					
Autonomy	5–7 rainy days on a full charge					
Operating temperature	−20 °C to +60 °C					
INSTALLATION						
Mounting height	3–6 m	3–6 m	7–8 m	7–8 m	8–10 m	8–10 m
Pole top diameter	60 mm					
Installation spacing	20–40 m					

NOTES

- Flux values are the rated figures of the factory test report; production tolerance ± 5 %.
- YL models use a 5 V system; YY models 6 V; YH models 18 V — the panel and controller are matched per model and are not interchangeable.
- Pole, foundation and anchor bolts are project items and are not part of the luminaire scope.

CONTROL AND PROTECTION

HOW THE SYSTEM MANAGES ITSELF

Battery power indicator

Charge state is readable from the ground on every model in the range.

Single-string battery control

Embedded single-string management keeps the pack balanced and extends service life.

Intelligent power control

The controller judges recent weather and plans the discharge instead of running a fixed timer.

Infrared remote, six profiles

L / T / M / U / DEMO / OFF, retained after power loss.

E-AblePower Technology

LISHUI E-ABLE POWER EQUIPMENT CO., LTD
No.368, Chengbei Road, Liandu District, 323000, Lishui City, Zhejiang, China
www.e-ablepower.com | arthur@e-ablepower.com | WhatsApp +86 153 5558 9600

ALL-IN-TWO SOLAR PATHWAY AND STREET LIGHT · OPTICS, INSTALLATION AND SCOPE

AuroraPath

All-in-two solar path and street light · YL-30P / YL-60P / YY-80 / YY-100 / YH-100 / YH-120

DRAWINGS AND LIGHT DISTRIBUTION

FACTORY 2D DRAWING AND PHOTOMETRIC REPORT

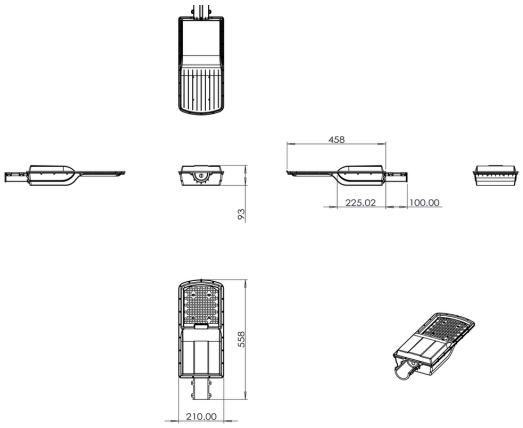

Outline drawing — lamp head and panel bracket, mm

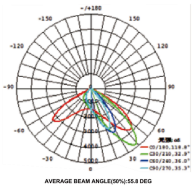

YY series

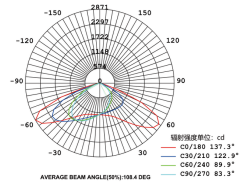

YH series

Luminous intensity distribution — cd

INSTALLATION

RECOMMENDED PRACTICE

Pole	60 mm top diameter; 3–6 m for YL, 7–8 m for YY, 8–10 m for YH
Head fixing	Clamp-on bracket; head arrives assembled with battery and controller
Panel orientation	Adjustable bracket; aim at true south or true north and set tilt to site latitude
Cable	Panel-to-head cable supplied with the luminaire; no trenching
Commissioning	Set the working profile by remote, confirm the charge indicator, record the serial number

SCOPE OF SUPPLY AND ORDERING

WHAT SHIPS AND WHAT IS QUOTED SEPARATELY

In the box	Lamp head with integrated LiFePO4 battery and MPPT controller, separate solar panel, panel bracket, panel-to-head cable, infrared remote
Ordering	Model + quantity + pole height + mounting height; pole and foundation quoted separately
Documentation	This datasheet, IES photometric file, installation manual, CE / RoHS certificates on request

PROJECT SIZING

Send road width, pole spacing and site coordinates — we return a DIALux layout and a model recommendation.

PHOTOMETRIC FILES

IES / LDT files, 2D drawings and the installation manual for this series are available on request.

CONTACT

arthur@e-ablepower.com
WhatsApp +86 153 5558 9600
www.e-ablepower.com

Source. Factory datasheets “Solar Street Light YL series” (YL-30P / YL-60P) and “Solar Street Light Y series” (YY-80 / YY-100 / YH-100 / YH-120), 2D drawings, product renders.

Disclaimer. Values are factory ratings at 25 °C ambient and are subject to the tolerances stated above. Final configuration, pole height and foundation are confirmed in the order acknowledgement. E-Able Power reserves the right to change components without notice provided performance is not reduced. | EAP-DS-20261109-AURORAPATH-R01 | Rev. 1.0