E-AblePower Technology

LISHUI E-ABLE POWER EQUIPMENT CO., LTD
No.368, Chengbei Road, Liandu District, 323000, Lishui City, Zhejiang, China
www.e-ablepower.com | arthur@e-ablepower.com | WhatsApp +86 153 5558 9600

E-ABLE POWER / SOLAR GARDEN LIGHT / BOLLARD

Solar Bollard Light CPD 5405

Diamond · 500 / 750 mm · 4.5 W solar or 220–240 V · IP65 · 180°

The Diamond is a 500 / 750 mm bollard for paths, garden edges and courtyard planting. It is a pedestrian-scale fixture: the light lands on the surface people walk on, not on the space above it, which is why the format belongs to gardens and estate roads rather than to street lighting.

The head is shared across the range on a Φ260 diameter; the body is die-cast aluminium, sealed to IP65. A 4.5 W / 5 V monocrystalline panel and a 3.2 V / 8000 mAh LiFePO4 battery sit in the head.

IN THIS DATASHEET

01	Technical data	Page 2
02	Dimensions	Page 3
03	Construction	Page 4
04	Applications	Page 5



IP65	4.5 W	325–373	3–5	180°	Φ260
PROTECTION	PANEL	LUMEN	RAINY DAYS	BEAM	HEAD, MM

KEY FEATURES

01

Die-cast aluminium body
One-piece casting, corrosion resistant, fixed with stainless fasteners.

180° distribution
Light spread over 180° so the pool stays on the walking surface.

Monocrystalline panel
4.5 W / 5 V panel in the head; charges in overcast weather.

LiFePO4 battery
3.2 V / 8000 mAh; stable chemistry, deep-cycle tolerant.

Dusk-to-dawn control
Automatic on at dusk, off at dawn; no timer to set.

IP65 protection
Sealed against rain and dust for permanent outdoor use.

ORDERING OPTIONS

Model	Size	Power	Mounting	Head
CPD-5405 / 50	500 mm	Solar 4.5 W	Base, expansion screws	Φ260 mm
CPD-5405 / 75	750 mm	Solar 4.5 W	Base, expansion screws	Φ260 mm
CPD-5405 / 50 AC	500 mm	220–240 V AC	Base, expansion screws	Φ260 mm
CPD-5405 / 75 AC	750 mm	220–240 V AC	Base, expansion screws	Φ260 mm

E-AblePower Technology

LISHUI E-ABLE POWER EQUIPMENT CO., LTD
No.368, Chengbei Road, Liandu District, 323000, Lishui City, Zhejiang, China
www.e-ablepower.com | arthur@e-ablepower.com | WhatsApp +86 153 5558 9600

TECHNICAL DATA

02

Values are transcribed from the supplier specification. The AC version shares the head, lens and body with the solar unit; its luminous flux is quoted per order because the driver is chosen at ordering.

Item	Solar · 500 mm	Solar · 750 mm	AC version
Electrical			
Rated power	4.5 W	4.5 W	220–240 V AC
Input voltage	DC 3.2 V	DC 3.2 V	220–240 V, 50/60 Hz
Solar panel	4.5 W / 5 V monocrystalline	4.5 W / 5 V monocrystalline	—
Battery	3.2 V / 8000 mAh LiFePO4	3.2 V / 8000 mAh LiFePO4	—
Autonomy	12 h, 3–5 rainy days	12 h, 3–5 rainy days	Mains supply
Optical			
Light source	2835 SMD LED, 30 pcs	2835 SMD LED, 30 pcs	2835 SMD LED
Luminous flux	325 lm (3000K) / 373 lm (6500K)	325 lm (3000K) / 373 lm (6500K)	On request
Colour temperature	3000K – 6500K	3000K – 6500K	3000K – 6500K
CRI (Ra)	> 80	> 80	> 80
Beam angle	180°	180°	180°
Construction			
Material	Die-cast aluminium + PC	Die-cast aluminium + PC	Die-cast aluminium + PC
Lamp colour	Black (other colours on request)	Black (other colours on request)	Black (other colours on request)
Head size	Φ260 mm	Φ260 mm	Φ260 mm
Overall size	Φ260 × 120 × H500 mm	Φ260 × 120 × H750 mm	H500 / H750 mm
Net weight	1.95 kg	2.42 kg	—
Mounting	Base, expansion screws	Base, expansion screws	Base, expansion screws
Operating			
Protection	IP65	IP65	IP65
Operating temperature	−25 to +50 °C	−25 to +50 °C	−25 to +50 °C
Humidity	10–90 %	10–90 %	10–90 %
Installation height	3–5 m	3–5 m	3–5 m
Packing			
Inner box	1 pc, 270 × 270 × 310 mm	1 pc, 270 × 270 × 310 mm	1 pcs
Outer carton	4 pcs, 570 × 570 × 350 mm	4 pcs, 670 × 570 × 340 mm	4 pcs
Gross weight	10.6 kg (outer, 4 pcs)	12.6 kg (outer, 4 pcs)	—

NOTES

- Values are transcribed from the supplier specification sheet for this model. Where a range is given, the lower figure applies to the warm-white version and the upper to the cool-white version.
- Autonomy figures assume a full charge, the factory dusk-to-dawn program and normal winter insolation for the latitude of installation.
- Luminous flux and CRI are quoted per colour temperature; the two are measured separately on the production sample.

VERSIONS



Solar · base mount



Solar · ground spike



AC · 220–240 V

E-AblePower Technology

LISHUI E-ABLE POWER EQUIPMENT CO., LTD
No.368, Chengbei Road, Liandu District, 323000, Lishui City, Zhejiang, China
www.e-ablepower.com | arthur@e-ablepower.com | WhatsApp +86 153 5558 9600

DIMENSIONS

03

CPD5405-50CM

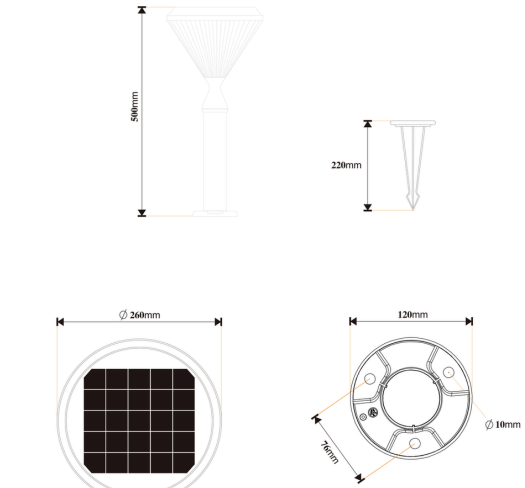

CPD-5405 · overall height 500 mm

CPD5405-75CM

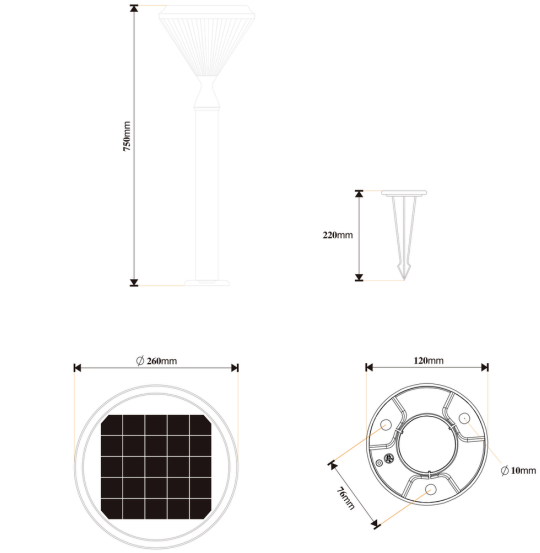

CPD-5405 · overall height 750 mm

Head Φ260 mm on a Φ120 mm post; 500 mm and 750 mm overall heights. Drawings are the supplier artwork, reproduced to scale.

MOUNTING OPTIONS

03



Base mount (standard)



Ground spike (option)



AC version

The base version is fixed to a concrete plinth or a paving base with expansion screws. Every height in the range uses the same head and the same fixing points, so a shorter unit can be swapped for a taller one without redrilling.

INSTALLATION SEQUENCE

- **1 · Set out the line.** Mark centres at 3–5 m for paths and 6–8 m for estate roads; keep 0.3 m clear of the paving edge so the base is not walked on.
- **2 · Fix the base.** Cast a small plinth or use the paving base, then tighten the three expansion screws; check the post is plumb before final tightening.
- **3 · Mount the head.** Seat the head on the post and align the light distribution with the walking surface; the distribution is symmetric, so alignment is for appearance only.
- **4 · Commission.** Press the switch and wait 3 s; confirm the lamp lights only in darkness. A full charge takes one clear day.

SUPPLIED BY E-ABLE

- Luminaire head with integrated panel and battery
- Post and base plate
- Three expansion screws

BY THE PROJECT

- Concrete plinth or paving base
- Supply cable and protection (AC version only)

LISHUI E-ABLE POWER EQUIPMENT CO., LTD
No.368, Chengbei Road, Liandu District, 323000, Lishui City, Zhejiang, China
www.e-ablepower.com | arthur@e-ablepower.com | WhatsApp +86 153 5558 9600

CONSTRUCTION

04



3000K — warm white, 325 lm, Ra 84.75



6500K — white, 373 lm, Ra 81.17

BUILD AND MATERIALS

Construction	
Light source	2835 SMD LED, 30 pcs, rated 80 000–100 000 h
Diffuser	PC translucent, diamond-faceted, transmittance up to 90 %
Body	One-piece die-cast aluminium, corrosion resistant
Solar panel	Monocrystalline 4.5 W / 5 V, integrated in the head
Battery	LiFePO4 3.2 V / 8000 mAh, more than 2 000 cycles
Control	Dusk-to-dawn sensor, waterproof push switch

The 180° faceted distribution is what makes this bollard suitable for path edges: light lands on the walking surface at 3–5 m spacing instead of forming a bright spot at the post.

WHAT TO SPECIFY

- **Height.** 500 / 750 mm — use the lower height for planting borders and low hedges, the higher where the head must clear shrubs.
- **Version.** Solar where no mains is available; AC 220–240 V where a supply already reaches the bed.
- **Mounting.** Base for paving and concrete; spike for soil and mulch.
- **Light colour.** 3000K – 6500K: 3000K for warm residential settings, 6500K where a cooler, brighter path is wanted.

2 years	CE, RoHS, IP65	PWM
WARRANTY	CERTIFICATIONS	CONTROLLER

LISHUI E-ABLE POWER EQUIPMENT CO., LTD
No.368, Chengbei Road, Liandu District, 323000, Lishui City, Zhejiang, China
www.e-ablepower.com | arthur@e-ablepower.com | WhatsApp +86 153 5558 9600

APPLICATIONS

05

A 500 / 750 mm bollard is a **pedestrian-scale** fixture: it lights the surface people walk on, not the space above it. That is why the format belongs to gardens and estate roads rather than to street lighting. The five settings below are the ones this model is ordered for most often.

WHERE IT FITS

- **Villa gardens and courtyards** — line the path from gate to door at 3–4 m spacing; the 180° distribution lights the paving without throwing light into bedroom windows.
- **Community greenways and residential roads** — higher units on both edges read as a continuous ribbon at night and mark the kerb line for drivers.
- **Park and plaza edges** — mixed with planting, they define the walkable area without poles or glare.
- **Hotel and resort landscaping** — the head is decorative in daylight, so it doubles as garden furniture rather than a technical fixture.
- **Municipal footpaths and cycleways** — solar units avoid trenching; 3–5 overcast days of autonomy covers most temperate and subtropical sites.

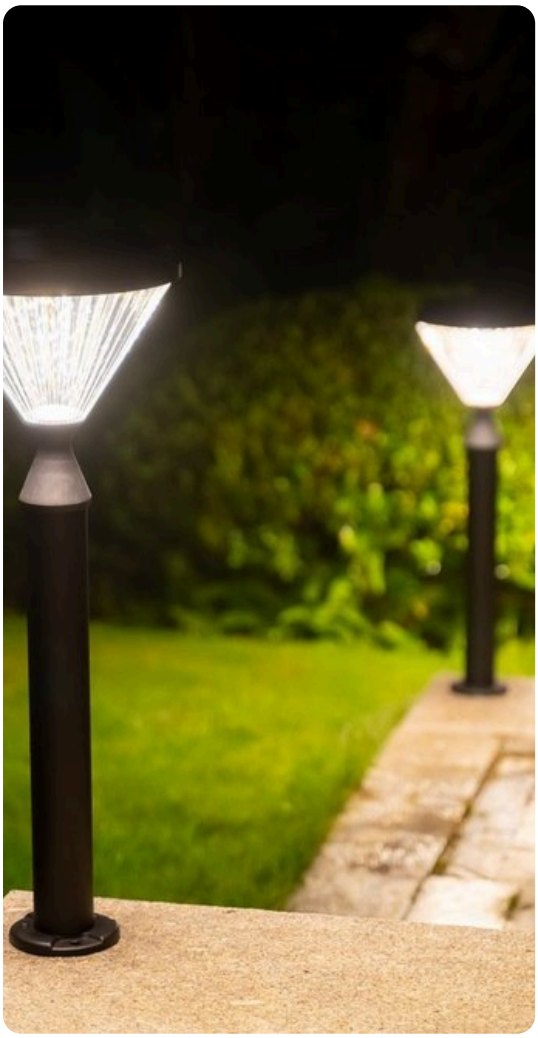

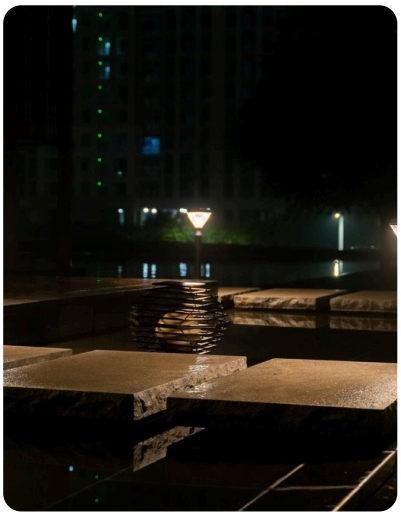

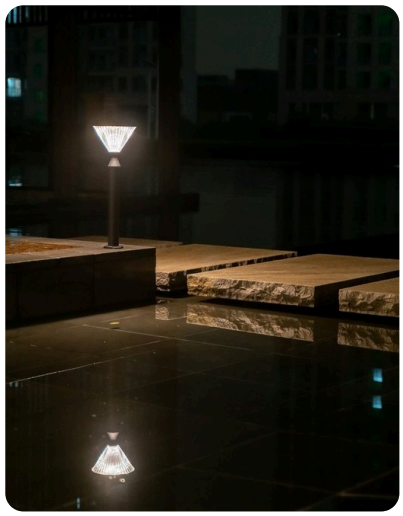

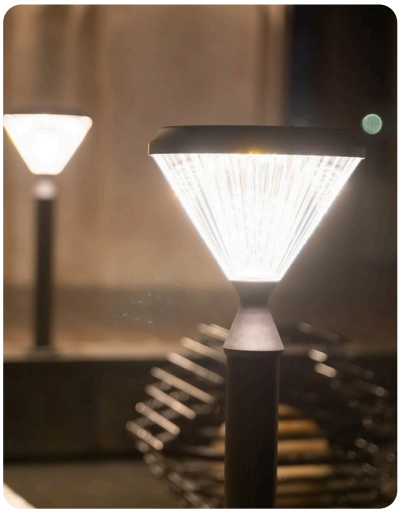

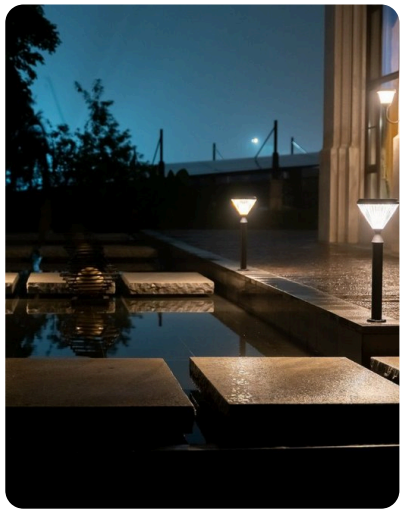

Selection note: space the units at 3–5 m for path lighting and 6–8 m for estate roads; keep the lower height for planting borders and the higher where the fixture must clear shrubs.

Specifications are nominal and may change without notice. The contractual revision is the one confirmed in the order acknowledgement.