E-AblePower Technology

LISHUI E-ABLE POWER EQUIPMENT CO., LTD
No.368, Chengbei Road, Liandu District, 323000, Lishui City, Zhejiang, China
www.e-ablepower.com | arthur@e-ablepower.com | WhatsApp +86 153 5558 9600

E-ABLE POWER / SOLAR LIGHTING / HELIA

Helia

All-in-one solar street light · RSK series · 4 models · 4,000–15,000 lm · IP65

Helia is the compact branch of the E-ABLE POWER all-in-one range, built on the RSK platform. The luminaire integrates panel, LiFePO4 battery, MPPT controller, LED module and sensor in one body that clamps to a Ø60 or Ø76 mm pole top.

Four steps from 4,000 to 15,000 lm cover residential roads, car parks and industrial access. The battery and LED blocks are modular, so a single spare module serves the whole series.



4	15,000	150°×70°	5–7
models, 42–120 W panel	lm at RSK-120	bat-wing optic	rainy days autonomy

KEY FEATURES

01

Integrated body — Panel, battery, controller and LED in one aluminium housing; the pole carries the luminaire only.

Weather-aware control — The controller regulates discharge from recent weather, extending the nightly run time.

Status indicators — Blue, red and green lamps report charging, battery state and load state.

Sealed, serviceable — Waterproof rubber ring and a switch button on the body; the battery block is replaceable.

Bat-wing lens — Patented lens with a 150° × 70° distribution for even coverage of the carriageway.

Rotating holder — The tilt is set to the road width at installation and locked with the sleeve.

MODEL RANGE

Model	Luminous flux	Solar panel	Mounting height
RSK-40	4,000 lm	42 W	4–6 m
RSK-60	6,000 lm	60 W	6–7 m
RSK-80	10,000 lm	90 W	6–8 m
RSK-120	15,000 lm	120 W	8–10 m

Typical applications — Residential roads · car parks · industrial access roads · campuses · cycle paths

E-AblePower Technology

LISHUI E-ABLE POWER EQUIPMENT CO., LTD
No.368, Chengbei Road, Liandu District, 323000, Lishui City, Zhejiang, China
www.e-ablepower.com | arthur@e-ablepower.com | WhatsApp +86 153 5558 9600

TECHNICAL DATA

02

Model	RSK-40	RSK-60	RSK-80	RSK-120
Luminous flux	4,000 lm	6,000 lm	10,000 lm	15,000 lm
LED module	SMD3030 · 140	SMD3030 · 240	SMD3030 · 240	SMD3030 · 240
Solar panel	42 W	60 W	90 W	120 W
Battery	144 Wh / 45 Ah	240 Wh / 75 Ah	384 Wh / 120 Ah	640 Wh / 200 Ah
Pole top diameter	Ø60 mm	Ø76 mm	Ø76 mm	Ø76 mm
Mounting height	4–6 m	6–7 m	6–8 m	8–10 m

SERIES DATA, COMMON TO ALL MODELS

Luminous efficacy	**> 160 lm/W, complete luminaire**
Beam angle	**150° × 70°, bat-wing lens**
Colour temperature	**3000–7500 K**
CRI	**Ra ≥ 70**
Ingress protection	**IP65**
Lifespan	**50,000 h**
Operating temperature	**-20 °C to +60 °C (charge above 0 °C)**
Autonomy	**5–7 rainy days**
Warranty	**3 years**

- Values are reproduced from the RSK series specification, RSK Series specs 2025 V1.0.
- The model code is a series step; panel and battery of each step are given in the table above.
- Default remote mode is T; the selected mode is retained until it is changed.
- RSK-40 uses a Ø60 mm pole top; RSK-60 to RSK-120 use Ø76 mm.

REMOTE CONTROL MODES

L	**100 % 2 h · 70 % 2 h · 30 % to dawn**
T	**100 % 3 h · 50 % 2 h · 20 % 6 h · 50 % 1 h before dawn**
M	**100 % whole night, reduced output**
U	**100 % 3 h · 50 % 3 h**

Modes are written to the controller by the handset; the selected mode is retained until it is changed.

E-AblePower Technology

LISHUI E-ABLE POWER EQUIPMENT CO., LTD
No.368, Chengbei Road, Liandu District, 323000, Lishui City, Zhejiang, China
www.e-ablepower.com | arthur@e-ablepower.com | WhatsApp +86 153 5558 9600

DIMENSIONS & PHOTOMETRY

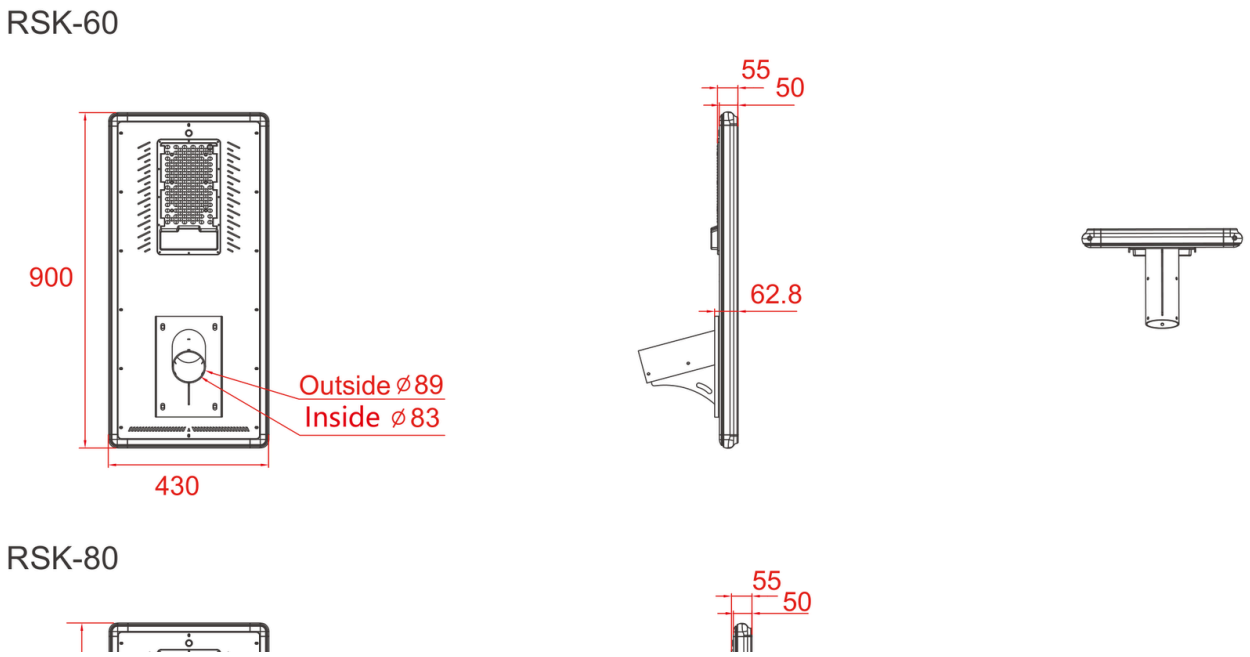

Dimension drawing — Factory artwork in millimetres; one representative model shown.

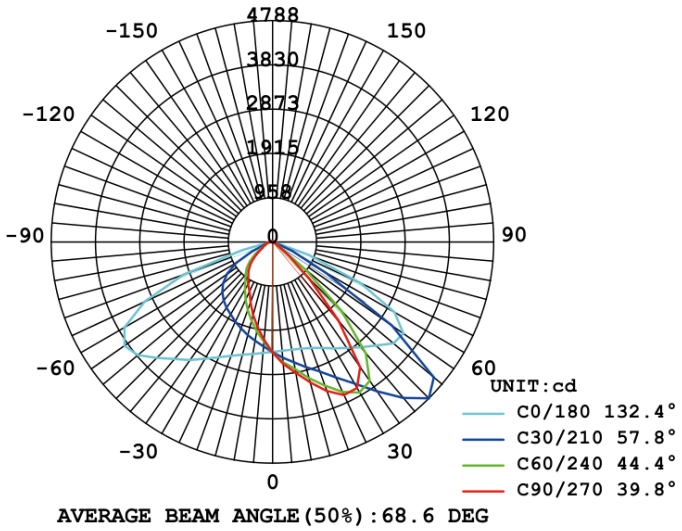

Luminous intensity distribution, C planes; average beam angle 68.6°.

Ø60 / 76 mm
Pole top diameter

20–40 m
Installation spacing

IP65
Ingress protection

COMPLIANCE AND PHOTOMETRY

RoHS and CE. IP65 applies to the complete luminaire. Photometric data reproduced from the factory light-distribution curve.

E-AblePower Technology

LISHUI E-ABLE POWER EQUIPMENT CO., LTD
No.368, Chengbei Road, Liandu District, 323000, Lishui City, Zhejiang, China
www.e-ablepower.com | arthur@e-ablepower.com | WhatsApp +86 153 5558 9600

INSTALLATION & COMMISSIONING

04

MOUNTING SEQUENCE

1. Check the pole top: Ø60 mm for RSK-40, Ø76 mm for RSK-60 to RSK-120, plumb and stable.
2. Slide the sleeve over the pole top, set the tilt to the road width, and tighten the fixings.
3. Press the switch button on the body and read the indicator lamps: blue charging, red battery, green load.
4. Select the mode with the handset, then leave the luminaire on charge for the first day.

COMMISSIONING CHECKLIST

- Waterproof switch on, battery indicator showing charge.
- Panel clean, tilt set for the latitude, no shade at 09:00, 12:00 and 15:00.
- Fixture locked on the pole: no rotation by hand, cable entry sealed.
- Mode selected with the handset and written to the controller; night test done.
- Model, serial number and commissioning date recorded for the warranty file.



Factory recommendation: mounting height per model. The final height follows the road class and the lighting calculation for the project.

SITE RULES

- Install on a dry day: a luminaire installed in rain cannot recover charge before its first night.
- The pole and its foundation are by others; the pole must be plumb and rated for the luminaire plus wind load.
- Storage over 6 months: recharge in sunlight or through the charging port before installation.

ORDERING AND SCOPE

Order by model code, for example ST2-80 or RSK-80, and state the pole top diameter and the mounting height. Poles, brackets and spare battery modules are quoted separately.

RoHS and CE. IP65 applies to the complete luminaire. Photometric data reproduced from the factory light-distribution curve.

Specifications are nominal and may change without notice. The contractual revision is the one confirmed in the order acknowledgement. Installation is summarised here; the factory manual covers the full procedure. Draft R02 for internal review.